INTERMEDIATE SHAFT

COMPONENTS

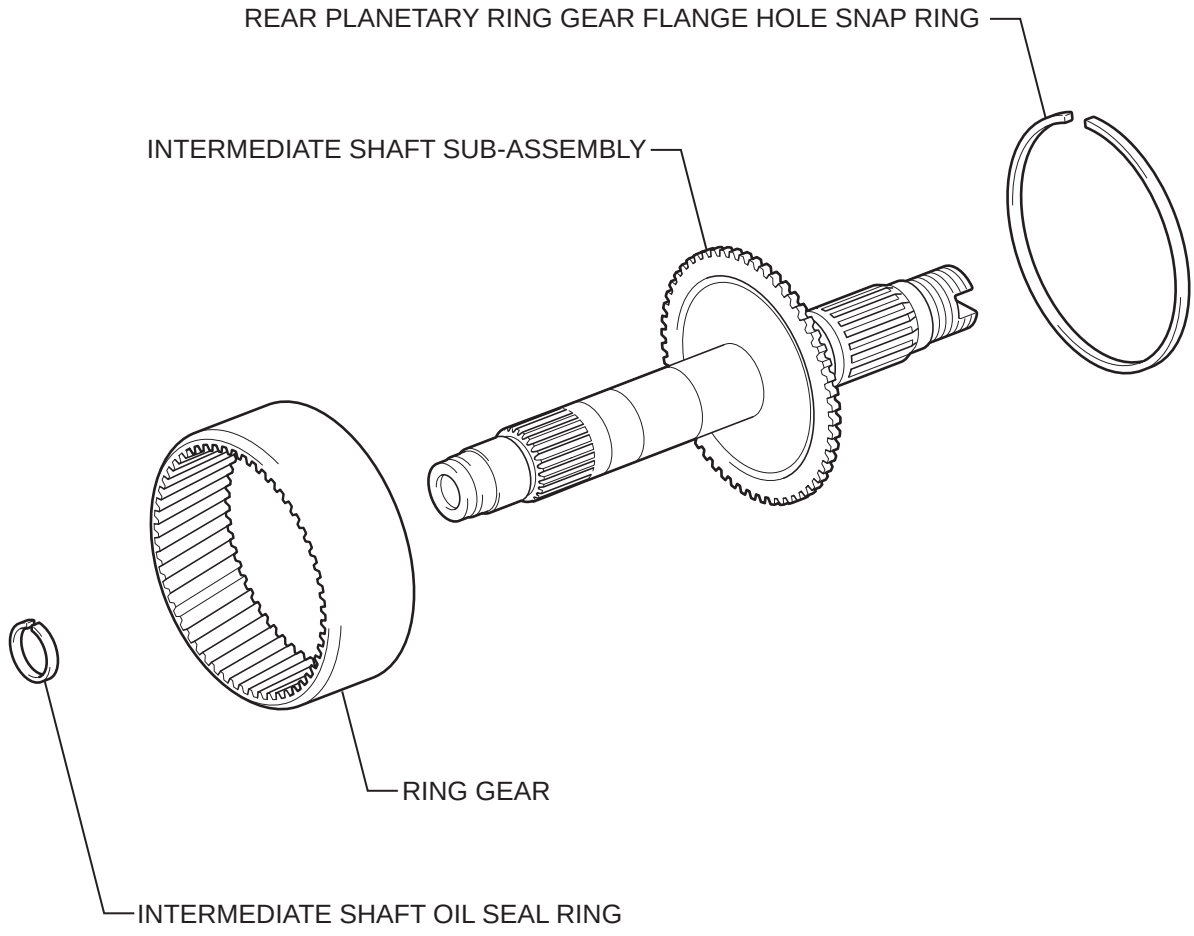

P

C119523E02

cardiagn.com

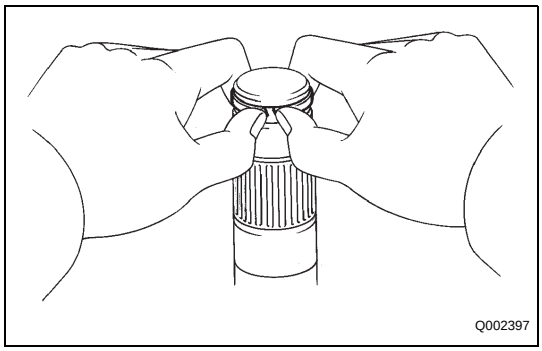

DISASSEMBLY

1. REMOVE INTERMEDIATE SHAFT OIL SEAL RING

(a) Remove the intermediate shaft oil seal ring from the intermediate shaft sub-assembly.

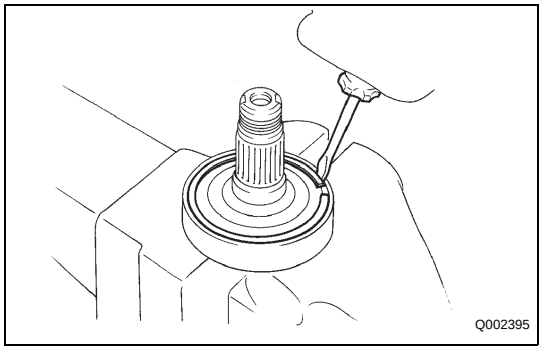

2. REMOVE REAR PLANETARY RING GEAR FLANGE HOLE SNAP RING

(a) Using a screwdriver, remove the rear planetary ring gear flange hole snap ring from the intermediate shaft sub-assembly.

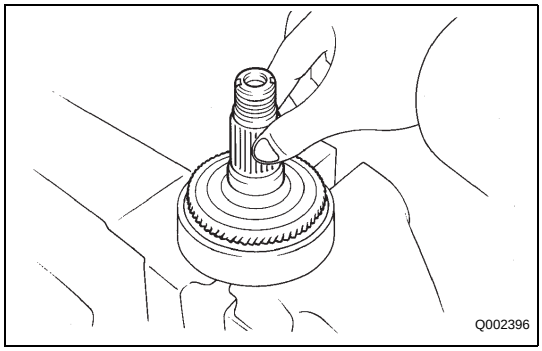

(b) Remove the intermediate shaft from the ring gear.

AX

REASSEMBLY

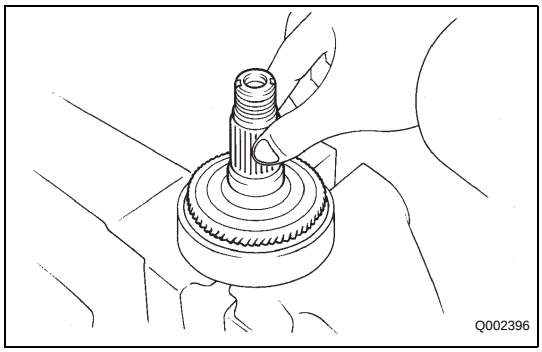

1. INSTALL REAR PLANETARY RING GEAR FLANGE HOLE SNAP RING

(a) Install the intermediate shaft to the ring gear.

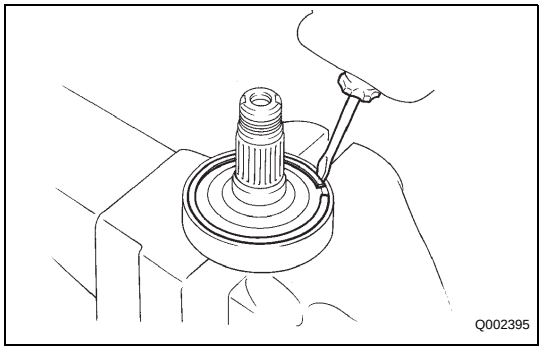

(b) Using a screwdriver, install the rear planetary ring gear flange hole snap ring to the intermediate shaft sub-assembly.

cardiagn.com

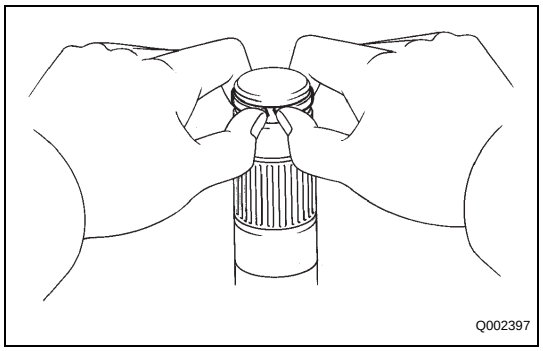

2. INSTALL INTERMEDIATE SHAFT OIL SEAL RING

(a) Install the intermediate shaft oil seal ring to the intermediate shaft sub-assembly.

cardiagn.com